Sigfox Module WSG303S

Compact-sized
With Ultra-low Power Consumption

RF on pad

IPEX

- Sigfox Support
- ISM RC1 (868MHz)
- AT Commands
- Extended Temperature Range: -40˚C to +85˚C
- Ultra-Low Power Consumption (2.2uA @ sleep mode)

WSG303S RC1 is a Sigfox modem module for the low power wide area network (LPWAN) market. It is designed with STM's system S2-LP+STM32 MCU for the European market (EN 300 220).

The module was designed for high performance, high quality, low cost, small form factor and most importantly, high RF power of up to 14dBm. The design is fully compliant to ETSI regulations. The Sigfox application is running on SMT32 MCU at high efficiency executed at high efficiency using its internal 32bit core Cortex-M0 processor.

Every module is preloaded with Sigfox application software, module specific ID/KEY/PAC as referring to Sigfox network system. The preloaded software also includes a bootloader which allows software update or future user application development.

LITEON®

sigfox

Sigfox Verified™ Certificate

M_004E_728B_01

Congratulations LITE-ON, the following product is now Sigfox Verified™ certified :

sigfox verified

MODULE : WSG303S
TYPE : RC1 UPLINK AND DOWNLINK
LAYOUT : WSG303S_V03
SCHEMATIC VERSION : WSG303S_V03
BOM : WSG303S_V03
FIRMWARE : V2.0.0.7
SIGFOX LIB : V2.2.2_FDL
TEST REPORT : CORP-6774_RC1_UDL
CERTIFICATION DATE : MAY 24, 2018

This certificate is valid for this product only. Any change to the certified product has to be reported to Sigfox as it may lead to a renewal of the Sigfox Verified™ certification.
The Sigfox Verified™ logo must be used in respect of Sigfox branding guidelines.

Sigfox - Bâtiment E-volution - 425, rue Jean Rostand
31670 Labege - FRANCE
www.sigfox.com

General Feature

- General Sigfox module for Smart City, Smart Agriculture , Smart Industry, IOT Application
- Compact Form Factor: 22.5 x 16.5 x 3.0 mm
- 51 Pin LGA Pad for PCB SMT mounting
- Interface : I2C*1/UART*1/GPIO*3/ADC*2/SWD*1
- Temperature range: -40°C to +85°C
- Supply voltage: 2.0 ~ 3.6V
- Frequency range: ISM RC1 868MHz
- ETSI EN 300 220-1、ETSI EN 300 220-2
- Preloaded Sigfox application with ID/KEY/PAC and bootloader for firmware update

Product Specifications

	RF Function
Standard	Sigfox Network System
Interface	I2C/UART/GPIO/ADC/SWD
Transmit Output Power	14dBm
Data Rate	Uplink: 100bps Downlink: 600bps
Modulation Techniques	Uplink DBPSK Modulation Downlink GFSK Modulation
Frequency bands	Uplink Central Frequency 868.130 MHz Downlink Central Frequency 869.525 MHz
Operating Voltage	2.0 ~ 3.6V
Operating Temperature	-40 ~ 85 degree C
Current consumption	Tx mode(TX period): 21mA Uplink(TX 1 frame): 24mA Downlink:14mA Normal mode: 5mA Sleep mode: 2.2 uA

Module Pinout

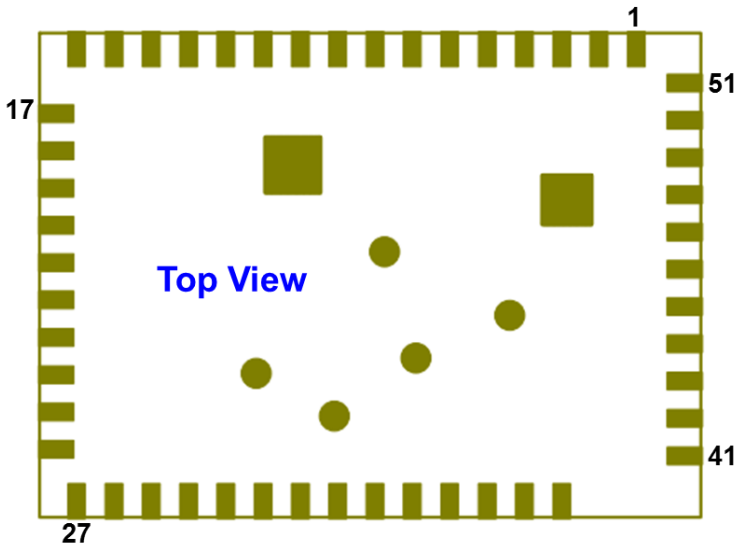

Pin Definition

Pin.	Description	Function	Pin.	Description	Function
1,2,3,4,5,15,16,39,40,41,42,43,44,45,47,48,49,50,51	GND	GND	24	PA11	PA11
6	SDO	PA6	25	PA12	PA12
7	SDI	PA7	26	SWDIO	PA13 (MCU debugging and programming)
8	SCLK	PB3	27	SWCLK	PA14 (MCU debugging and programming)
9	CSN	PA1	28	NC	NC
10	GPIO0	PA0	29	PB4	PB4
11	GPIO1	PA4	30	PB5	PB5
12	GPIO2	PB1	31	I2C1_SCL	PB6
13	GPIO3	PA15	32	I2C1_SDA	PB7
14	SDN	SDN=0, Shutdown mode	33	NRST	NRST (MCU Reset)
17	USART2_TX	PA2 (115200bps)	34	BOOT0	BOOT0 (Floating or Low)
18	USART2_RX	PA3 (115200bps)	35	PB8	PB8
19	PA5	PA5	36	XI	PC14-OSC_IN (Ready for External Crystal)
20	PB0	PB0	37	XO	PC15-OSC32_OUT (Ready for External Crystal)
21	PB2	PB2	38	VDD	VDD_3V3
22	UART1_TX	PA9 (115200bps)	46	ANT1	SigFox Antenna
23	UART1_RX	PA10 (115200bps)			

Block Diagram

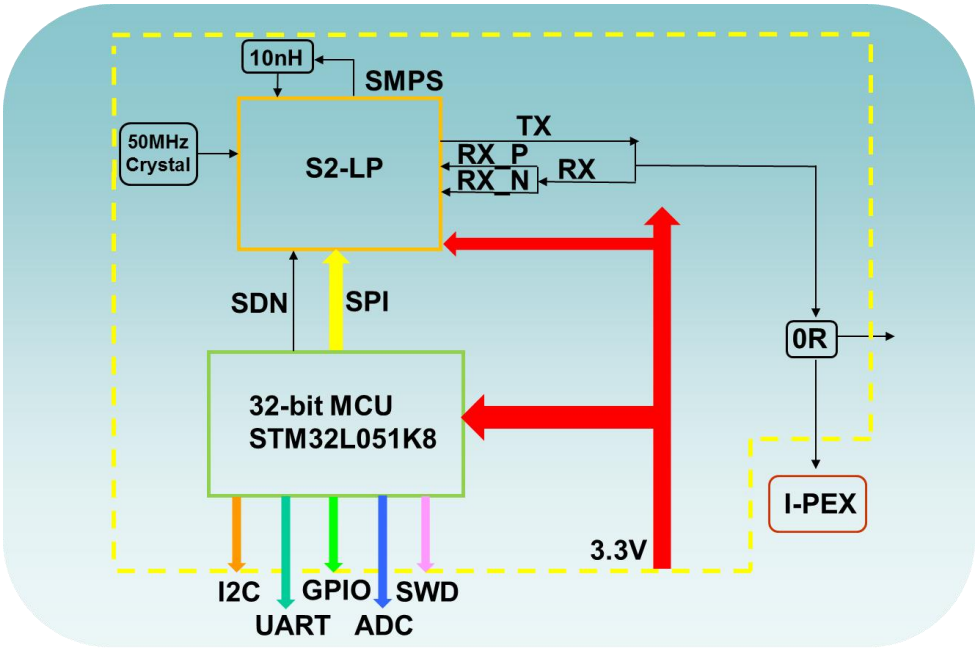

Module Dimension

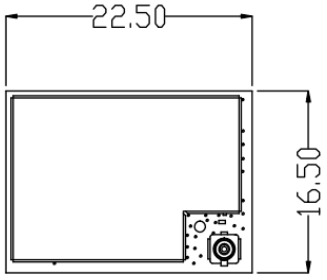

Tolerance: +/- 0.15mm

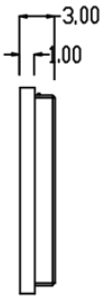

Recommended Footprint

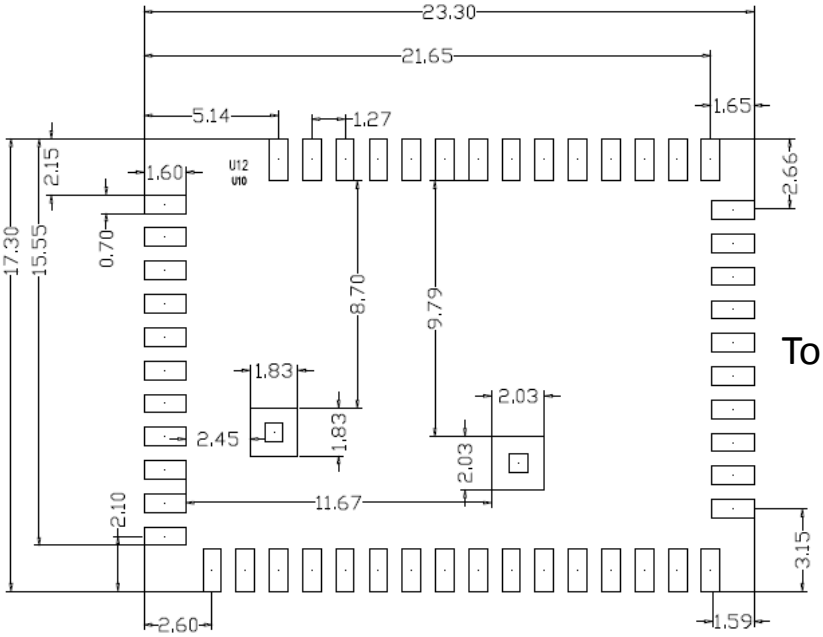

Tolerance: +/- 0.1mm

RECOMMENDED REFLOW PROFILE

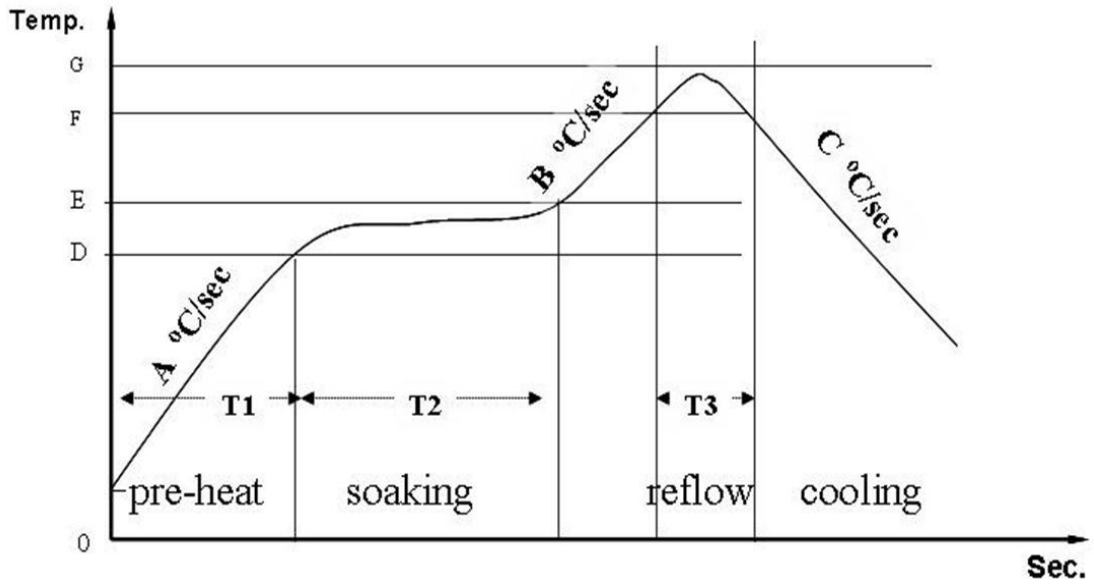

Standard conditions for reflow soldering:

- a. Pre-heating Ramp (A) (Initial temperature: 150℃): 1~2.5℃/sec;
- b. Soaking Time (T2) (150℃~180℃): 60sec~100sec;
- c. Peak Temperature (G): 230~250℃;
- d. Reflow Time (T3) (>220℃): 30~60 sec;
- e. Ramp-up Rate (B): 0~2.5℃/ sec;
- f. Ramp-down Rate (C): 1~3℃/ sec.

AT COMMAND LIST

Command	Description	Value
Switch_Public_Key v	Set public key state	v= 0: private , 1: public
Get_ID	Get device ID	return ID
Get_PAC	Get device PAC	return PAC
Get_RCZ	Get device regional	return regional
Get_Sigfox_Ver	Get the Sigfox library version	return library version
Get_FWVer	Get the firmware version	return firmware version
Get_FreqBase	Get current frequency setting	Return frequency in Hz
Set_FreqBase u	Set transmission frequency in Hz	e.g. u= 868130000
Send_MSG u	Send payload data, 1 to 12 bytes	Frame: data bytes (0,1,2,3…C,D,E,F) to be sent, 12 byte maximum
		if data not 1 bytes must be discarded e.g. u= 012 -> 01
Send_Frame u v w	Send payload data, 1 to 12 bytes	Frame: data bytes (0,1,2,3…C,D,E,F) to be sent, 12 byte maximum
		u= data to transmit, e.g. u= 1234
		v= Number of repetition[1 to 3], e.g. v= 2
		w=Flag to initiate a downlink response, 1= downlink 0= non downlink
		if data not 1 bytes, fill up with 0 e.g. u= ABC -> AB0C
Uplink u	Send the number of payload data, the data is 11223344	u = how many frames to send
Set_CWTx u	Continuous TX wave transmission	e.g. u = 5000, u is the number of frames to be sent
		the transmission default frequency is 868130000 Hz
SleepMode	Set device in Sleep Mode	In Sleep Mode, press any key to exit and reset device
Reset	system soft reset	

LABEL DRAWING

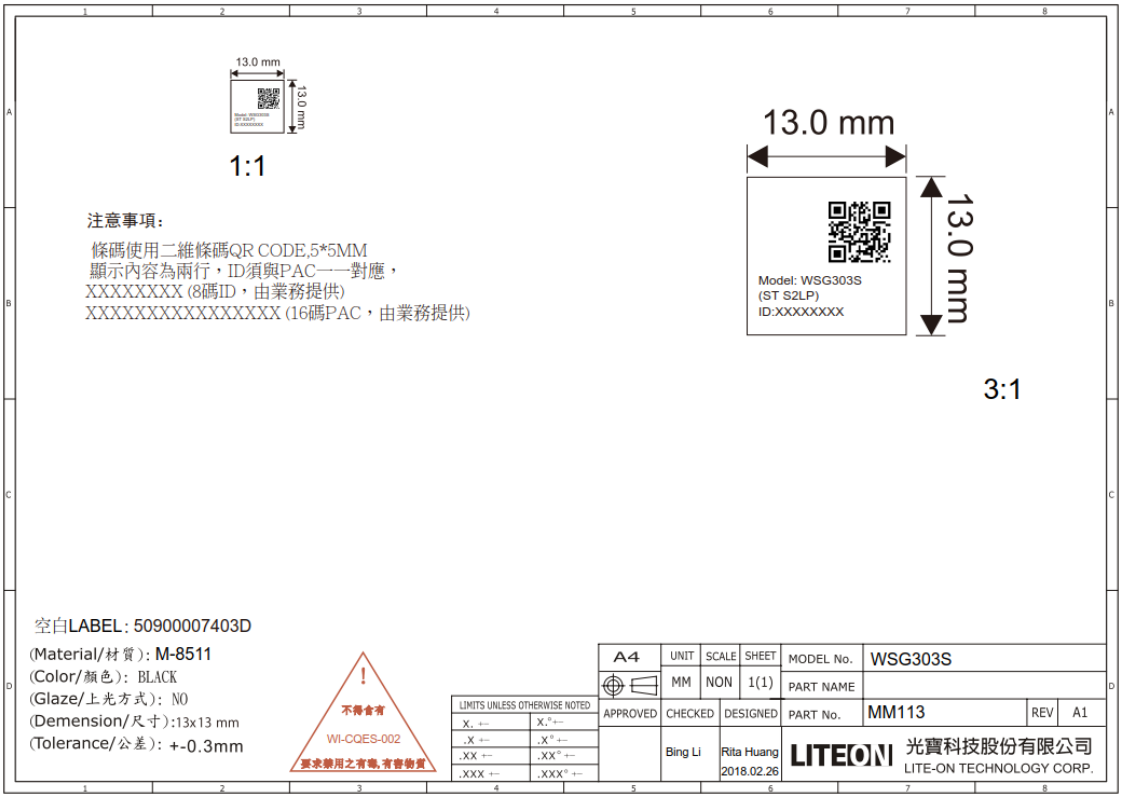

PACKAGING SPEC

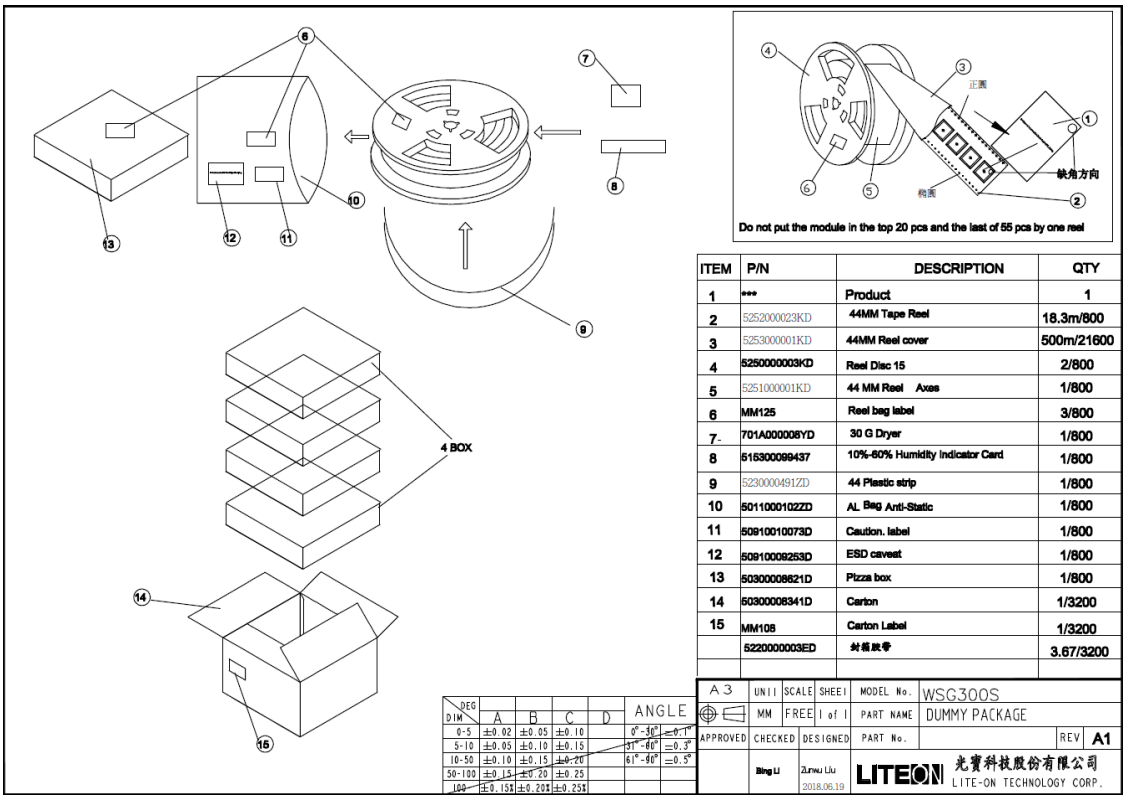

ITEM	P/N	DESCRIPTION	QTY
1	***	Product	1
2	5252000023KD	44MM Tape Reel	18.3m/800
3	5253000001KD	44MM Reel cover	500m/21600
4	5250000003KD	Reel Disc 15	2/800
5	5251000001KD	44 MM Reel Axes	1/800
6	MM125	Reel bag label	3/800
7	701A000008YD	30 G Dryer	1/800
8	615300099437	10%-60% Humidity Indicator Card	1/800
9	5230000491ZD	44 Plastic strip	1/800
10	5011000102ZD	AL Bag Anti-Static	1/800
11	50910010073D	Caution. label	1/800
12	50910009253D	ESD caveat	1/800
13	5030000821D	Pizza box	1/800
14	5030000834ID	Carton	1/3200
15	MM108	Carton Label	1/3200
	5220000003ED	封箱胶带	3.67/3200

DEG DIM	A	B	C	D	ANGLE
0-5	±0.02	±0.05	±0.10		0°-30' =0.1°
5-10	±0.05	±0.10	±0.15		31'-60' =0.3°
10-50	±0.10	±0.15	±0.20		61'-90' =0.5°
50-100	±0.15	±0.20	±0.25		
100	±0.15%	±0.20%	±0.25%		

A3	UNIT	SCALE	SHEET	MODEL No.	WSG300S
	MM	FREE	1 of 1	PART NAME	DUMMY PACKAGE
APPROVED	CHECKED	DESIGNED		PART No.	REV A1
	Bing Li	Zuwu Liu 2018.06.19		LITEON	光寶科技股份有限公司 LITE-ON TECHNOLOGY CORP.

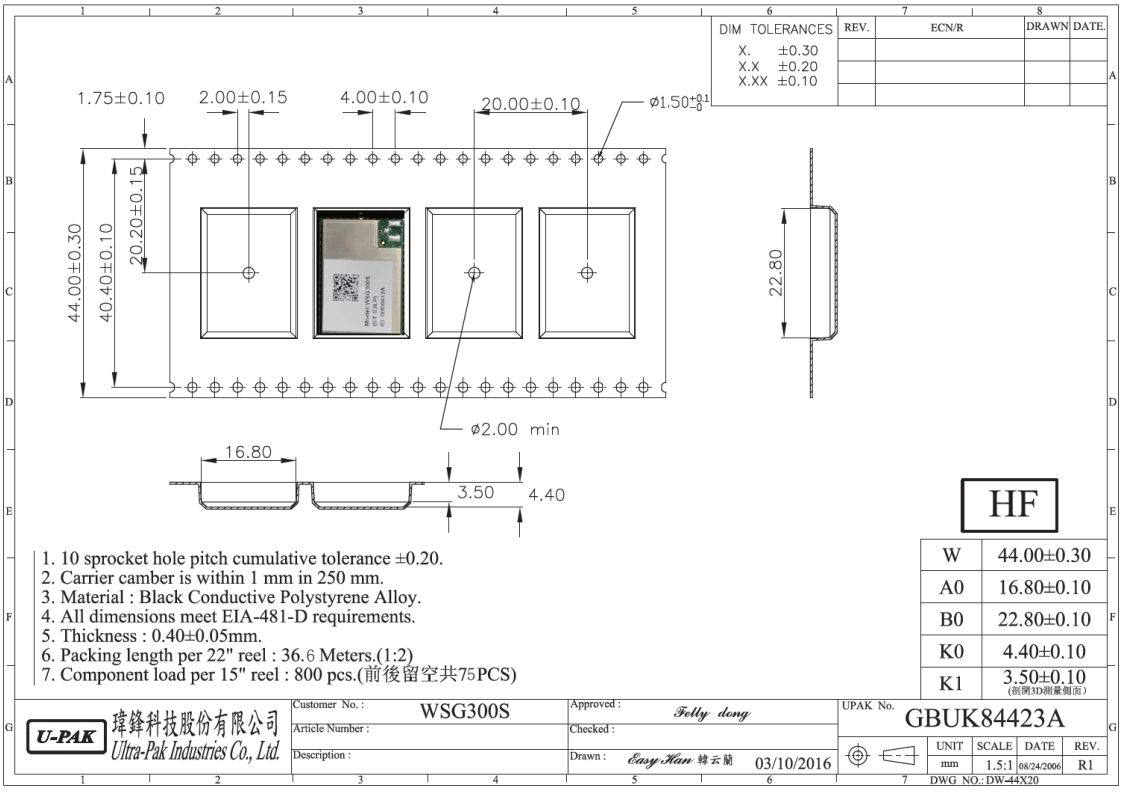

PACKAGING SPEC

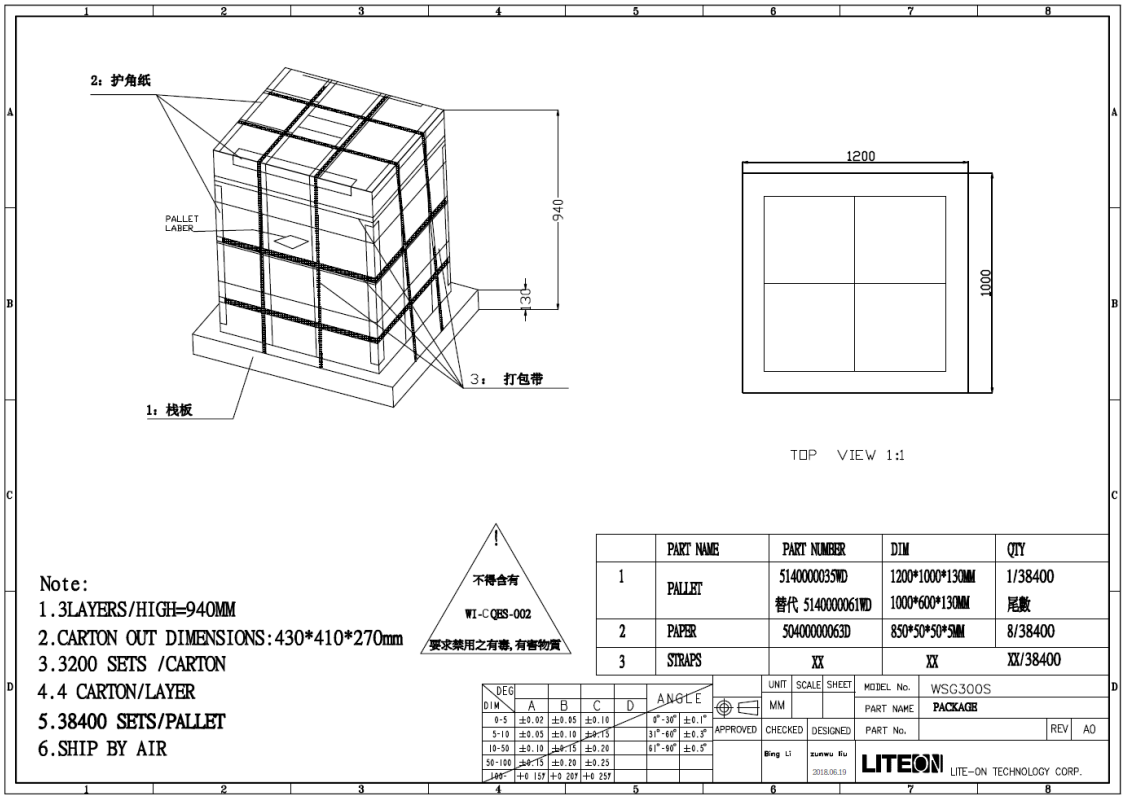

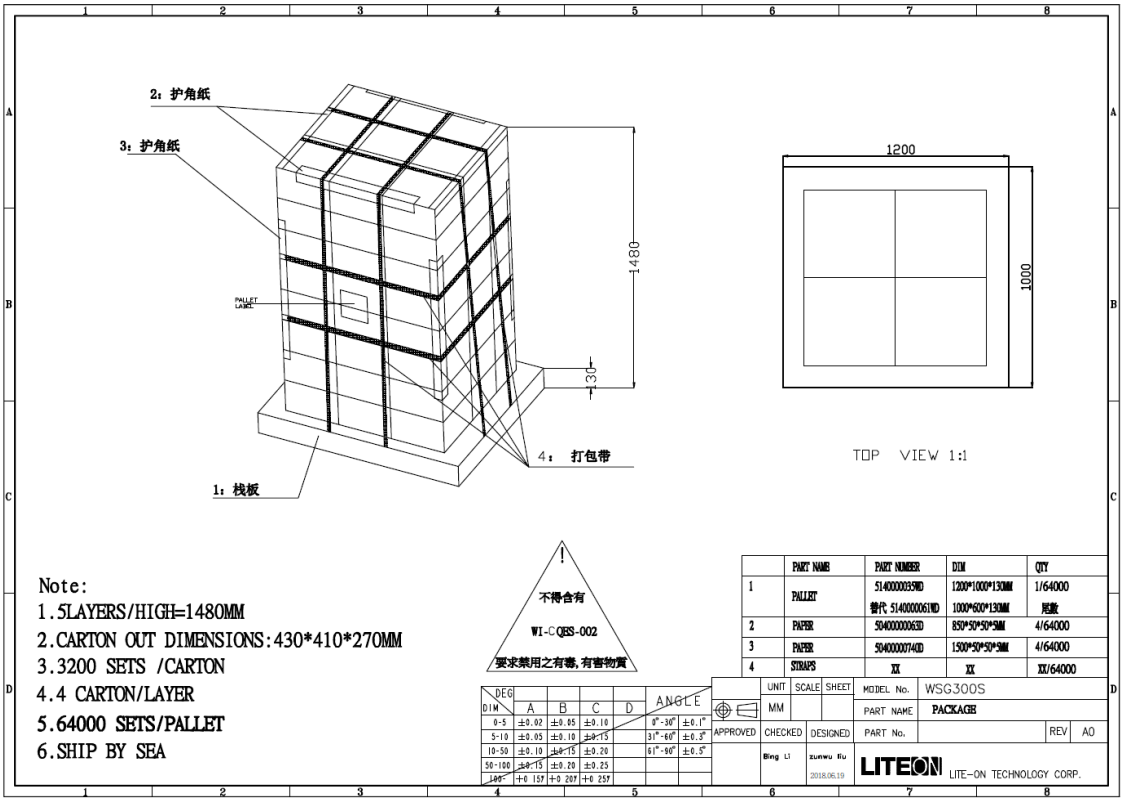

CHANGE LIST

Rev	Date	Author	Change List
V1.0	2018.02.12	Kaysa Lee	Preliminary
V1.1	2018.06.11	Kelly Hsu	Update Voltage supply Update Current consumption Update AT Command List
V1.2	2018.06.19	Kaysa Lee	Add Packaging spec
V1.3	2018.07.02	Kelly Hsu	Add Reflow profile Add Label Drawing
V1.4	2018.09.03	Kaysa Lee	Add sigfox P1 Cert
V1.5	2018.09.25	Kaysa Lee	Update Power consumption data