LITE-ON TECH. CORP.

PRODUCT SPECIFICATION

NRM7292B 802.11ah Wi-Fi module

WSG300NRC

Change History

Revision	Date	Author	Change List
Version 1.0	2019/8/6	Connie HY Wu	Preliminary
Version 1.1	2019/12/2	Connie HY Wu	Update photo
Version 1.2	2020/03/26	Connie HY Wu	Update pad dimension
Version 1.3	2020/04/20	Connie HY Wu	Update recommend footprint
Version 1.4	2020/07/24	Kelly Hsu	Update Block Diagram Modify Pin Description
Version 1.5	2021/08/27	Kelly Hsu	Update MAC Label(add FCC ID)
Version 1.6	2021/10/26	Kelly Hsu	Modify MAC Label dimension Add Packing Drawing

Content

Overview

IEEE 802.11ah is a new Wi-Fi standard operating in the Sub 1GHz license-exempt band, offering longer range and lower power connectivity necessary for internet of things (IoT) applications. WSG300NRC contains external RF front end module (FEM) which can increase transmission power up to 23 dBm. Onboard serial flash can be used for OTA software development and with internal 32KB cache memory, it can support execution in place (XIP) feature.

1.1 Module features

The main features are represented as follows:

- Standard
  - IEEE Std 802.11ah™-2016 compliant
  - 1/2/4 MHz channel bandwidth support
  - WPA2 PSK support
  - 150 kbps ~ 15 Mbps data rate
  - AP and STA role support
- Radio frequency
  - -109 dBm minimum receive sensitivity
  - +23 dBm transmit power
  - 920.5~924.5 MHz frequency band

  (By replacing RF SAW filter, other frequency band can be supported within 750~950 MHz)
- CPU
  - ARM Cortex-M3 for application
  - ARM Cortex-M0 for IEEE 802.11ah WLAN
  - Clock frequencies for both processor (32/48 MHz)
- Host interface
  - UART and SPI support for host interface
- Peripherals
  - GPIO, ADC, PWM and timers
  - I2C, SPI and UART
- Temperature range
  - -40°C to +125°C

1.2 Applications

Low to high data rate can be applied in various IoT applications like:

- Wearable
- Home automation
- Healthcare
- Industrial automation
- Safety and security
- Smart grid
- Multimedia streaming

2. Block Diagram

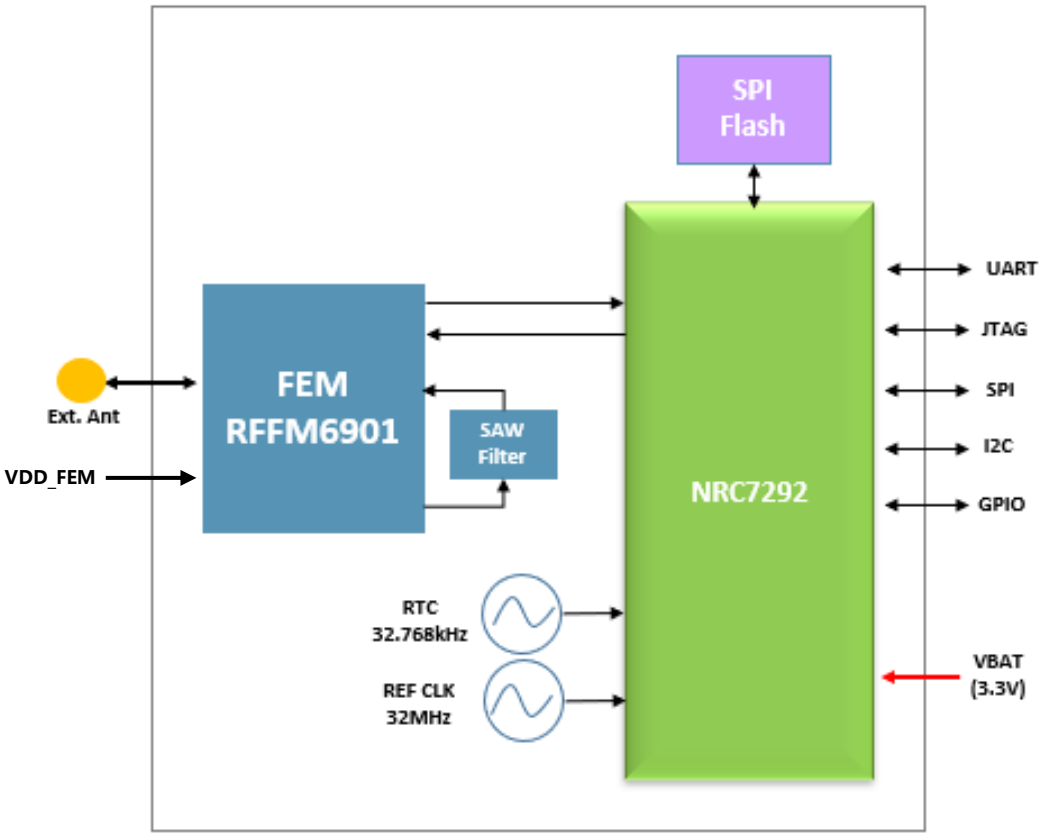

3. Pin Description

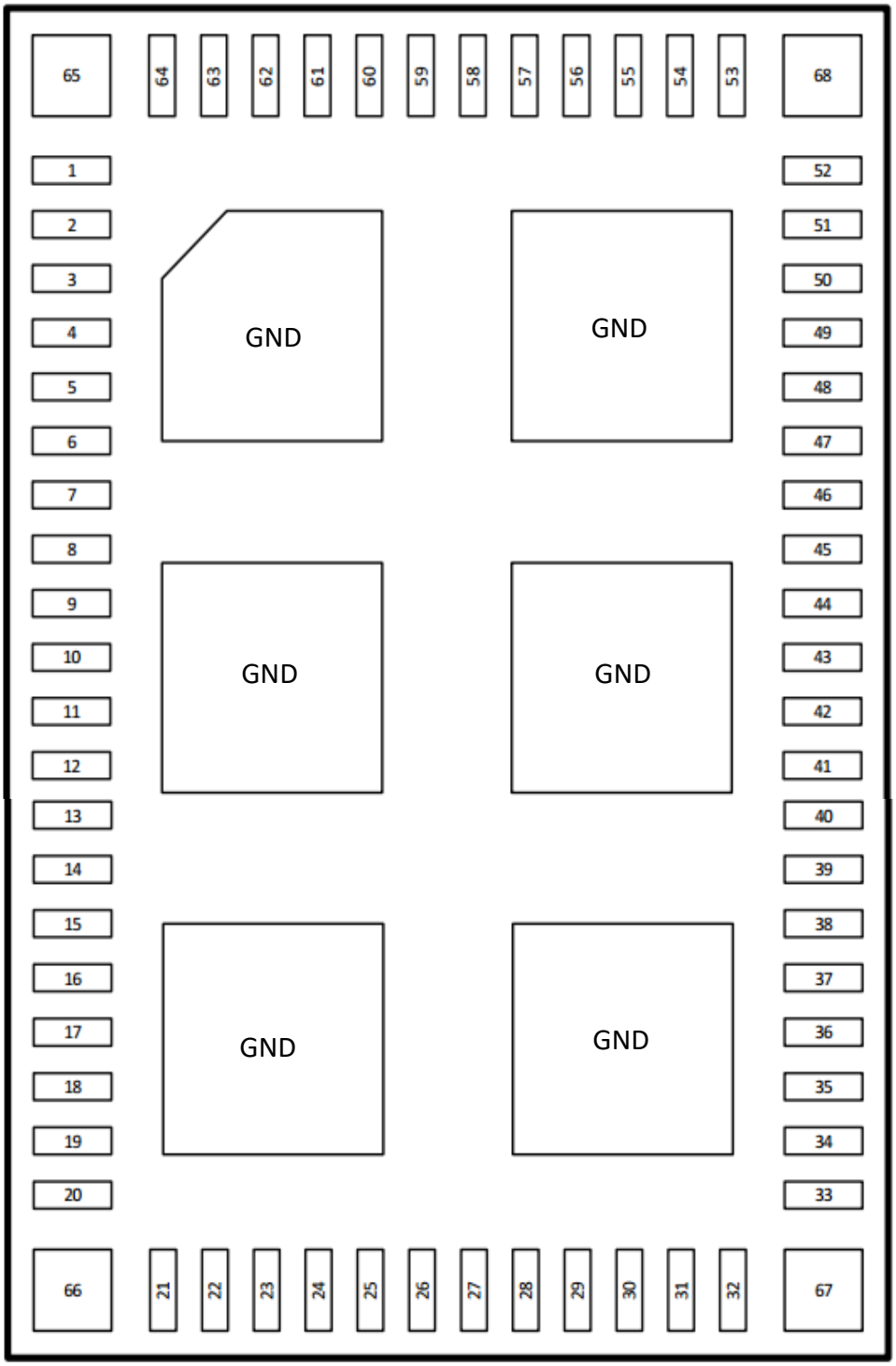

Pad no.	Name	Direction	Volt	Description
1	GROUND	GND		
2	GROUND	GND		
3	GROUND	GND		
4	GROUND	GND		
5	VDD_FEM	P		Module power input for FEM
6	VBAT_3.3V	P		Module power input for SYS
7	GROUND	GND		
8	GROUND	GND		
9	MODE_00	I		SW define (When ROM BOOT) 11: Internal SRAM BOOT
10	MODE_01	I		
11	MODE_02	I		0: ROM BOOT 1: XIP BOOT
12	MODE_03	I		0: Cortex-M0 Mater 1: Cortex-M3 Mater
13	MODE_04	I		0: Two CPU 1: One CPU
14	GROUND	GND		
15	HSPI_nCS	I		Host SPI-Chip Select (active low)
16	HSPI_CLK	I		Host SPI-Clock
17	HSPI_MISO	O		Host SPI-Mater in Slave out
18	HSPI_MOSI	I		Host SPI-Mater out Slave in
19	HSPI_EIRQ	O		Host SPI-Interrupt
20	GROUND	GND		
21	GROUND	GND		
22	NC	-		
23	NC	-		
24	NC	-		
25	GP_00_UART2_TX	I/O		UART Channel2 Tx
26	GP_01_UART2_RX	I/O		UART Channel2 Rx
27	GP_02_UART2_RTS	I/O		UART Channel2 RTS
28	GP_03_UART2_CTS	I/O		UART Channel2 CTS
29	GP_04_UART0_TX	I/O		UART Channel0 Tx
30	GP_05_UART0_RX	I/O		UART Channel0 Rx
31	GP_06_UART3_TX	I/O		UART Channel3 Tx
32	GP_07_UART3_RX	I/O		UART Channel3 Rx
33	GP_08_UART1_RX	I/O		UART Channel1 Rx
34	GP_11_UART1_TX	I/O		UART Channel1 Tx
35	GP_10_GPIO	I/O		Multiple purpose (GPIO, I2C, PWM, SPI, Ext-INT)
36	GP_09_GPIO	I/O		
37	GP_17_I2C_SDA	I/O		I2C_SDA
38	GP_16_I2C_SCL	I/O		I2C_SCL

39	GP_15_SSP0_CLK	O		SPI0_Clock
40	PD_14_SSP0_CS	O		SPI0_Chip Enable (active low)
41	PD_13_SSP0_MOSI	O		SPI0_Mater out Slave in
42	PD_12_SSP0_MISO	I		SPI0_Mater in Slave out
43	RESET	I		Reset (active high)
44	GROUND	GND		
45	JTAG_TRSTN	I		JTAG reset
46	JTAG_TMS	I		JTAG mode selection
47	JTAG_TCK	I		JTAG clock
48	JTAG_TDI	O		JTAG data input
49	JTAG_TDO	I		JTAG data output
50	GROUND	GND		
51	VDDIO	P		Module I/O supply input
52	GROUND	GND		
53	GROUND	GND		
54	AUXADCIN3	I		AUXADC input 3
55	AUXADCIN2	I		AUXADC input 2
56	AUXADCIN1	I		AUXADC input 1
57	GROUND	GND		
58	NC	-		
59	NC	-		
60	GROUND	GND		
61	GROUND	GND		
62	RF_ANT	I/O		RF IN/OUT
63	GROUND	GND		
64	GROUND	GND		
65	GROUND	GND		
66	GROUND	GND		
67	GROUND	GND		
68	GROUND	GND		

4. Absolute Maximum Rating

Symbol	Rating	Min	Max	Units
Storage Temperature		-40	+125	°C
Supply Voltage	VBAT	-0.5	3.8	V
	VDDIO	-0.5	3.8	V

NOTE: Stresses above those listed in Absolute Maximum Rating may cause permanent device failure. Functionality at or above these limits is not implied. Exposure to absolute maximum ratings for extended periods may affect device reliability.

5. Operating Condition

5.1 Operating condition

Symbol	Rating	Min	Typ	Max	Units
Operating Temperature Range		-40	-	+85	°C
Operating Voltage	VBAT	2.8	3.3	3.6	V
	VDDIO	1.8	3.3	VBAT	V

NOTE: To ensure WLAN performance, ripple on the 2.1- to 3.3-V supply must be less than ±300 mV and ripple on the 1.8-V supply must be less than 2% (±40 mV).

5.2 Current consumption

Mode	DUT Status	Band (MHz)	VBAT=3.3V, Ta=27°C
802.11ah (1Mhz BW)	TX@18dBm	922	200
	Continuous RX@-80dBm		41
802.11ah (2Mhz BW)	TX@18dBm	922	200
	Continuous RX@-80dBm		41
802.11ah (4Mhz BW)	TX@18dBm	922	200
	Continuous RX@-80dBm		42

Note: Unless otherwise specified, TA=27°C, VBAT=3.6V, using internal PMU. Measurements are done at antenna port, which is directly connect to the device.

5.3 Power on sequence

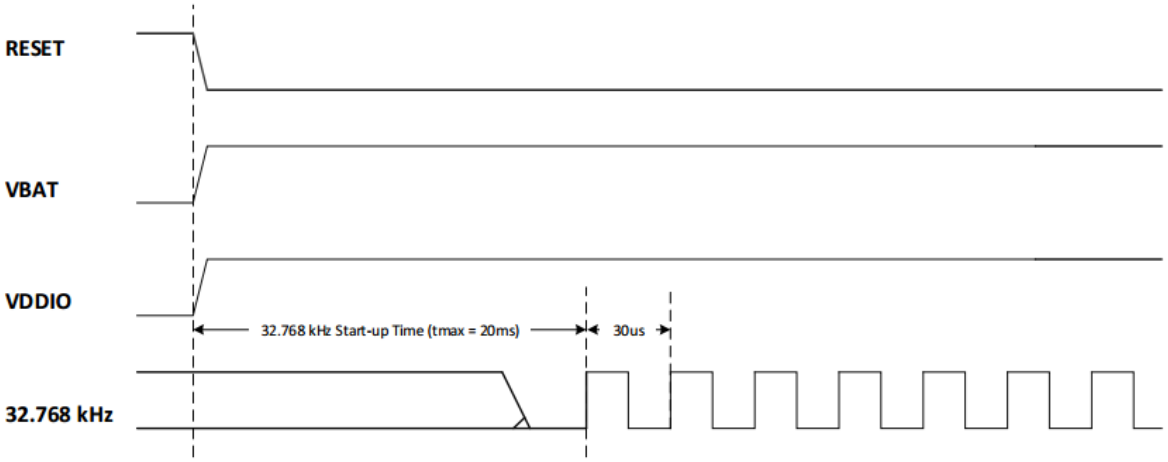

6. AC Specifications

6.1 HSPI timing

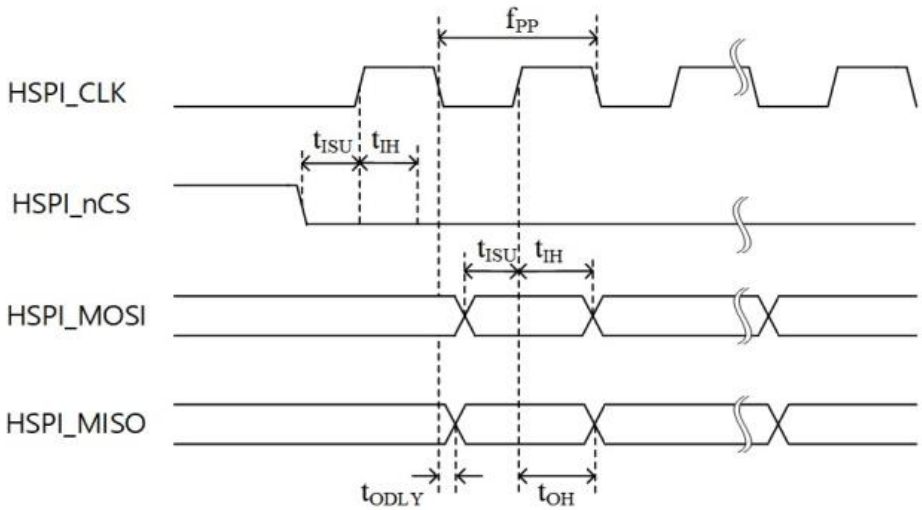

Symbol	Parameter	Min	Typ	Max	Unit
f_{PP}	Frequency	-	-	25	MHz
t_{ODLY}	Output delay time	6	-	-	ns
t_{OH}	Output hold time	2	-	-	ns
t_{ISU}	Input setup time	-	-	14	ns
t_{IH}	Input hold time	2.5	-	-	ns

6.2 SPI Timing

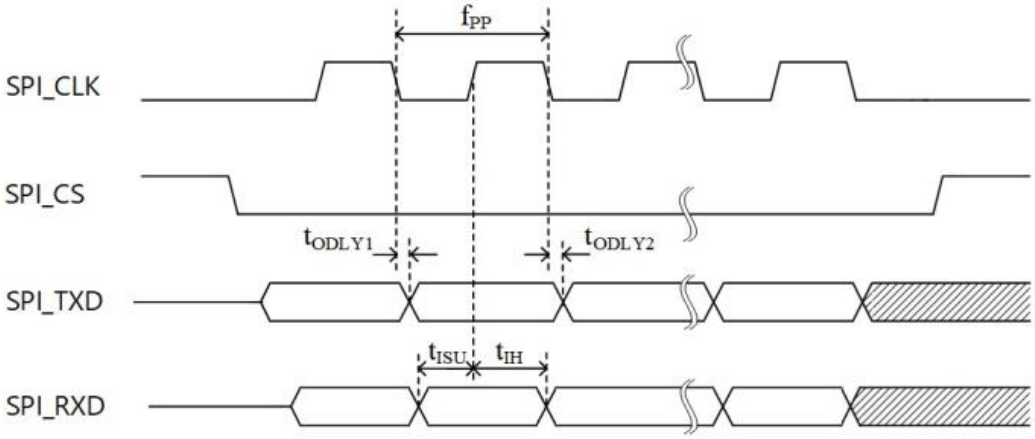

Symbol	Parameter		Min	Typ	Max	Unit
f_{PP}	Frequency	master	-	-	24	MHz
		slave	-	-	4	MHz
t_{ODLY1}	Output delay time1		0	-	10	ns
t_{ODLY2}	Output delay time2		0	-	10	ns
t_{ISU}	Input setup time		18	-	-	ns
t_{IH}	Input hold time		20	-	-	ns

6.3 AUXADC Timing

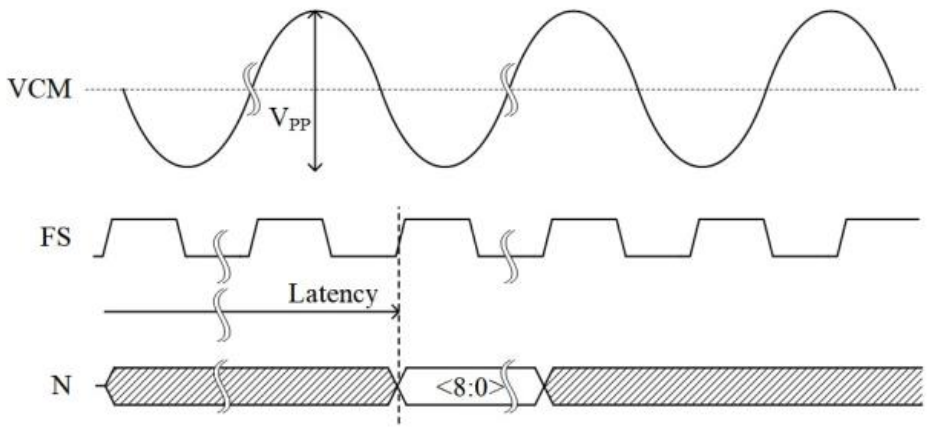

Symbol	Parameter	Min	Typ	Max	Unit
VCM	Input common-mode voltage	0.25	0.28	0.31	V
V_{PP}	Input Swing	-	0.5	-	Vpp
FS	Sampling Clock	-	32	-	MHz
Latency	Conversion latency(1 cycle = 31.25 ns)	-	11	-	cycle
N	Resolution	-	9	-	Bit
RIN	Input impedance	-	1	-	Mohms
I_active	Current consumption (1.2V supply)	-	-	300	uA
I_down	Power-down current (1.2V supply)	-	-	1	uA

7. 11ah WLAN RF Specifications and Performance

7.1 Transmitter Specifications

Parameter	Conditions	Min	Typ	Max	Unit
RF Output Frequency Range (1)		920.5		924.5	MHz
EVM compliant Output Power	13.5 Mbps (MCS7, 4 MHz BW)		18		dBm
EVM at 0 dBm output power			33		dB
Transmitter Spurious Signal Emissions	< 700 MHz		<-36		dBm/ MHz
	> 1 GHz		<-45		
RF Output Return Loss	Single ended output port		-10		dB
Output 1dB Gain Compression	0.4 MHz CW signal input		25		dBm
Gain Control Range		30			dB
Gain Control Step			1		dB
Unwanted Sideband	Over RF channel, RF frequency, and baseband frequency at 0 dBm output power		<-40		dBc

Note: Unless otherwise specified, TA=27°C, VBAT=3.6V, RF input/output specifications are referenced not device pins and do not include 1dB loss from EV kit OCB and SMA connector.

(1) RF output frequency range depends on RF SAW filter on the module. The NRC7292 chipset by itself can support frequency range from 750 to 950 MHz.

7.2 Receiver Specifications

Parameter	Conditions	Min	Typ	Max	Unit
RF Input Frequency Range (1)		920.5		924.5	MHz
RF Input Return Loss	For LNA high/mid/low gain modes	-10	-12	-15	dB
Total Voltage Gain Range	Analog + Digital Gain	-10		92	dB
RF Gain Step	From high gain mode to medium gain mode		6		dB
RX Gain Step	From RF to Analog		1		dB
DSB Noise Figure	LNA max gain mode		3.5		dB
IIP3	LNA with high gain mode		-17		dBm
	LNA with low gain mode		24		

Baseband Filters for Receiver (Analog + Digital Filter)					
Baseband -3dB Low-pass Corner Frequency (Controllable)	1 MHz channel		0.5		MHz
	2 MHz channel		1.0		MHz
	4 MHz channel		2.0		MHz

Note: Unless otherwise specified, TA=27°C, VBAT=3.6V, RF input/output specifications are referenced not device pins and do not include 1dB loss from EV kit OCB and SMA connector.

(1) RF output frequency range depends on RF SAW filter on the module. The NRC7292 chipset by itself can support frequency range from 750 to 950 MHz.

7.3 Transmitter Performance

DR/MCS/BW (Mbps/ /MHz)	IEEE Relative constellation error (dB)	EVM (%) (IEEE)	EVM (%) (NRM7292A)	Comments
0.15/MCS10/1	-4	63.1	3.1	BPSK Peak
0.30/MCS0/1	-5	56.2	3.1	BPSK Peak
0.60/MCS1/1	-10	31.6	3.1	18 dBm OFDM, RMS
0.90/MCS2/1	-13	22.4	3.1	18 dBm OFDM, RMS
1.20/MCS3/1	-16	15.8	3.1	18 dBm OFDM, RMS
1.80/MCS4/1	-19	11.2	3.1	18 dBm OFDM, RMS
2.40/MCS5/1	-22	7.9	3.1	18 dBm OFDM, RMS
2.70/MCS6/1	-25	5.6	3.1	18 dBm OFDM, RMS
3.00/MCS7/1	-27	4.5	3.1	18 dBm OFDM, RMS
0.65/MCS0/2	-5	56.2	2.9	BPSK Peak
1.30/MCS1/2	-10	31.6	2.9	18 dBm OFDM, RMS
1.95/MCS2/2	-13	22.4	2.9	18 dBm OFDM, RMS
2.60/MCS3/2	-16	15.8	2.9	18 dBm OFDM, RMS
3.90/MCS4/2	-19	11.2	2.9	18 dBm OFDM, RMS
5.20/MCS5/2	-22	7.9	2.9	18 dBm OFDM, RMS
5.85/MCS6/2	-25	5.6	2.9	18 dBm OFDM, RMS
6.50/MCS7/2	-27	4.5	2.9	18 dBm OFDM, RMS
1.35/MCS0/4	-5	56.2	3.0	BPSK Peak
2.70/MCS1/4	-10	31.6	3.0	18 dBm OFDM, RMS
4.05/MCS2/4	-13	22.4	3.0	18 dBm OFDM, RMS
5.40/MCS3/4	-16	15.8	3.0	18 dBm OFDM, RMS
8.10/MCS4/4	-19	11.2	3.0	18 dBm OFDM, RMS
10.80/MCS5/4	-22	7.9	3.0	18 dBm OFDM, RMS
12.15/MCS6/4	-25	5.6	3.0	18 dBm OFDM, RMS
13.50/MCS7/4	-27	4.5	3.0	18 dBm OFDM, RMS

Note: <Conditions> supply voltage VBAT 2.6~3.6V, TA=25°C, Signal within spectrum mask.

7.4 Receiver Performance

7.4.1 Receiver Sensitivity

Band	BW	Rate	Modulation/Coding Rate	Conditions/Conditions	Chip Port Specification [dBm]		
		kbps			Min	Typ	Max
920.5~ 924.5MHz	1 MHz	300	BPSK 1/2	@ PER<10%, 256 bytes Full Operating Temperature; Full Battery Voltage Range; Load Z : 50 Ohms;		-105	
		600	QPSK 1/2			-103	
		900	QPSK 3/4			-100	
		1200	16QAM 1/2			-97	
		1800	16QAM 3/4			-94	
		2400	64QAM 2/3			-90	
		2700	64QAM 3/4			-88	
		3000	64QAM 5/6			-87	
		150	BPSK 1/2 rep. 2x			-108	
	2 MHz	650	BPSK 1/2	@ PER<10%, 256 bytes Full Operating Temperature; Full Battery Voltage Range; Load Z : 50 Ohms;		-101	
		1300	QPSK 1/2			-98	
		1950	QPSK 3/4			-95	
		2600	16QAM 1/2			-92	
		3900	16QAM 3/4			-89	
		5200	64QAM 2/3			-85	
		5850	64QAM 3/4			-83	
		6500	64QAM 5/6			-82	
	4 MHz	1350	BPSK 1/2	@ PER<10%, 256 bytes Full Operating Temperature; Full Battery Voltage Range; Load Z : 50 Ohms;		-98	
		2700	QPSK 1/2			-95	
		4050	QPSK 3/4			-92	
		5400	16QAM 1/2			-89	
		8100	16QAM 3/4			-86	
		10800	64QAM 2/3			-82	
		12150	64QAM 3/4			-80	
		13500	64QAM 5/6			-79	

7.4.2 Adjacent Channel Rejection (ACR)

Band	BW	Rate	Modulation/Coding Rate	Conditions/Conditions	ACR [dB]		
		kbps			Min	Typ	Max
920.5~ 924.5MHz	1 MHz	300	BPSK 1/2	@ PER<10%, $P_{desired}=P_{sensitivity}$ + 3dB, $P_{interfere}$]@ N+1 channel		32	
		600	QPSK 1/2			30	
		900	QPSK 3/4			29	
		1200	16QAM 1/2			28	
		1800	16QAM 3/4			25	
		2400	64QAM 2/3			24	
		2700	64QAM 3/4			23	
		3000	64QAM 5/6			22	
		150	BPSK 1/2 rep. 2x			35	
	2 MHz	650	BPSK 1/2	@ PER<10%, $P_{desired}=P_{sensitivity}$ + 3dB, $P_{interfere}$]@ N+1 channel		30	
		1300	QPSK 1/2			28	
		1950	QPSK 3/4			27	
		2600	16QAM 1/2			26	
		3900	16QAM 3/4			23	
		5200	64QAM 2/3			21	
		5850	64QAM 3/4			19	
		6500	64QAM 5/6			17	
	4 MHz	1350	BPSK 1/2	@ PER<10%, $P_{desired}=P_{sensitivity}$ + 3dB, $P_{interfere}$]@ N+1 channel		28	
		2700	QPSK 1/2			26	
		4050	QPSK 3/4			25	
		5400	16QAM 1/2			23	
		8100	16QAM 3/4			20	
		10800	64QAM 2/3			18	
		12150	64QAM 3/4			15	
		13500	64QAM 5/6			12	

8. Product Characteristic

8.1 Product Dimension

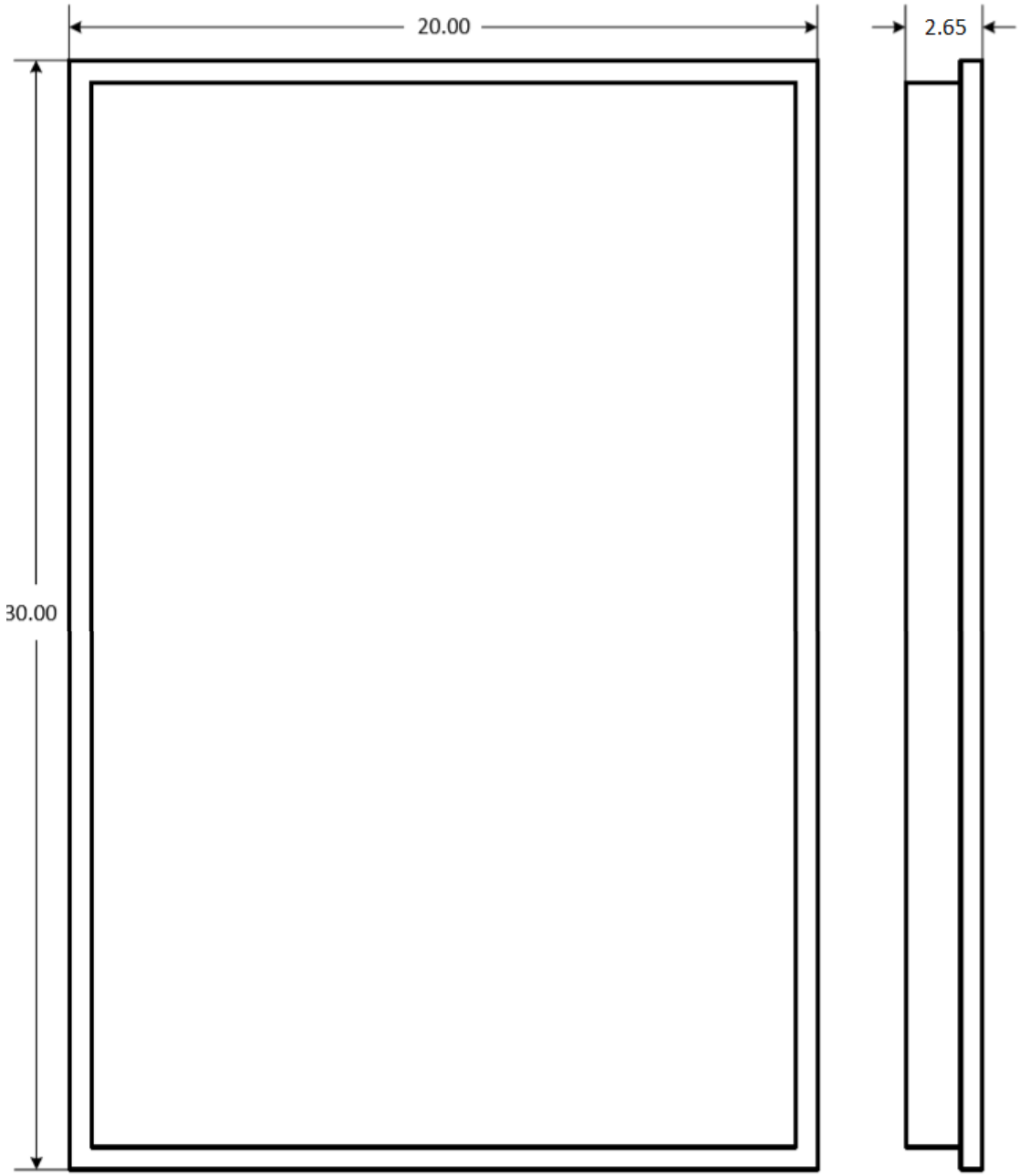

Physical dimension (top view) Unit: mm

8.2 PAD Dimension

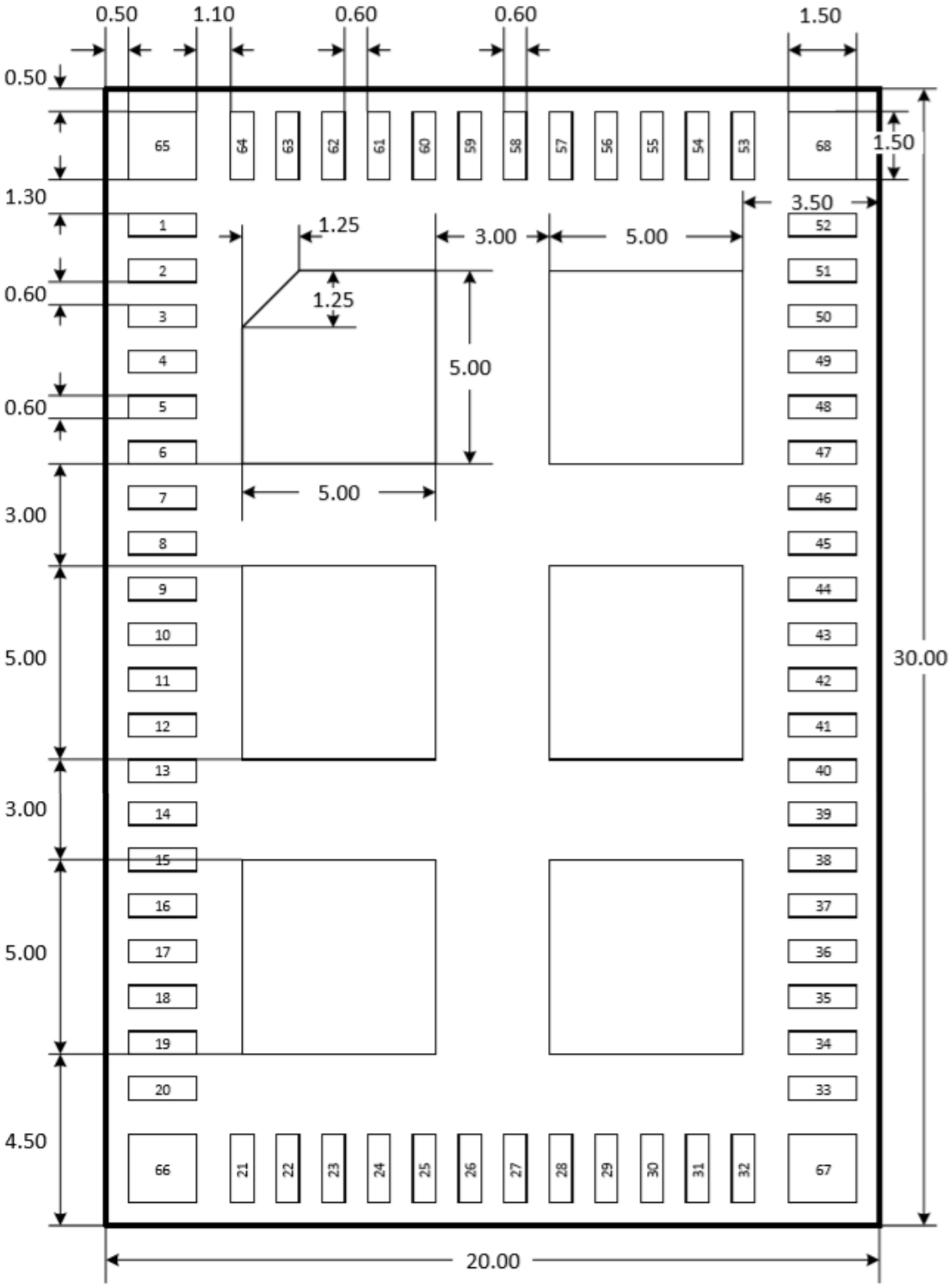

Physical dimension (top view) Unit: mm

8.3 Recommend footprint

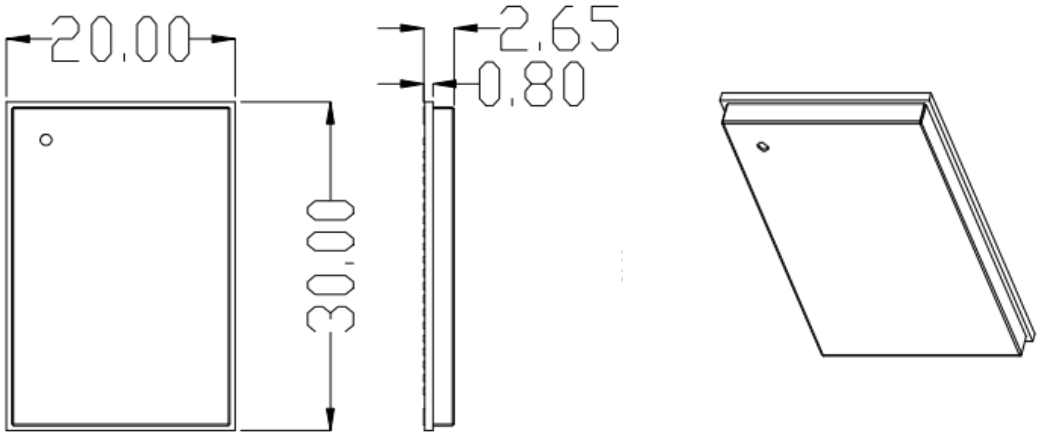

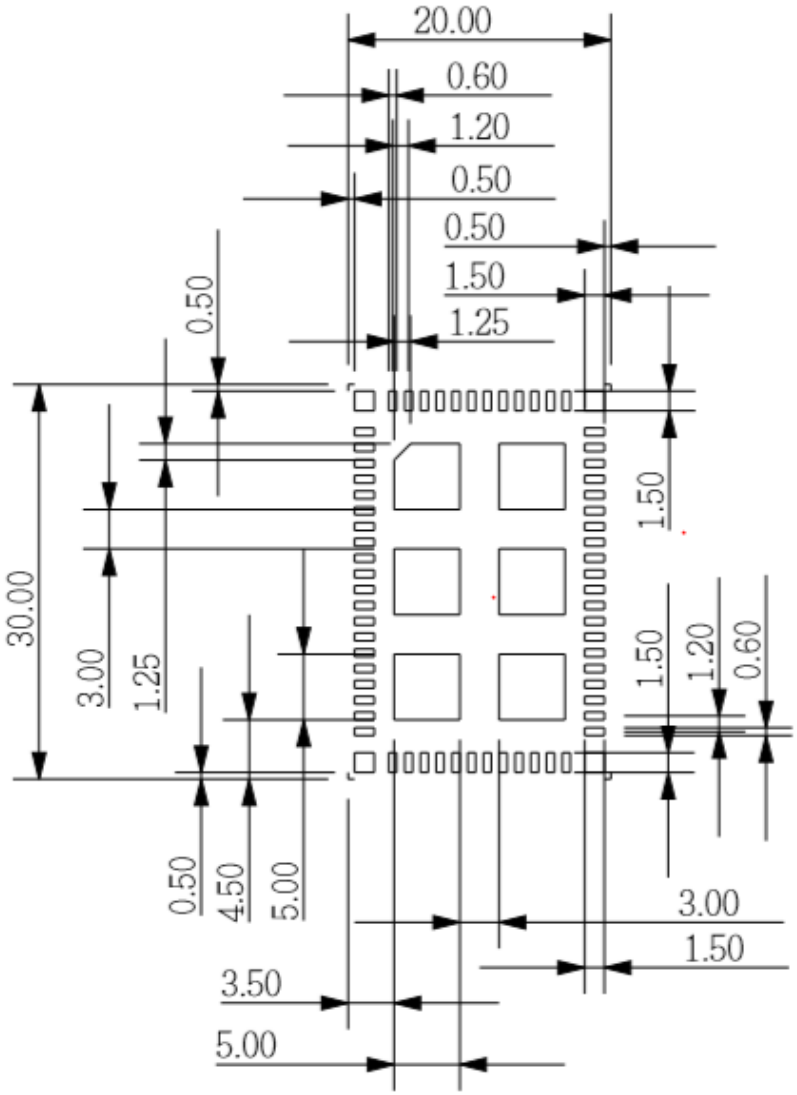

9. SMT Temperature Sequence (Pb-free)

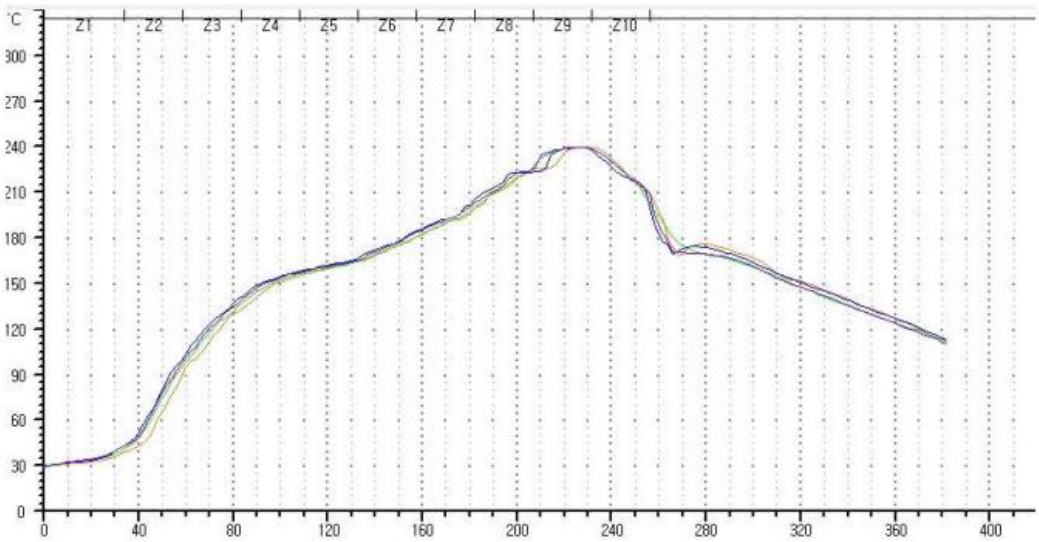

Reflow profile

10. MAC Label Drawing

注意事項：
條碼使用ECC 200, 尺寸為5*5mm. 等級為B級以上。
條碼顯示內容為XXXXXXXXXXXX（業務提供）

11. Packing Drawing

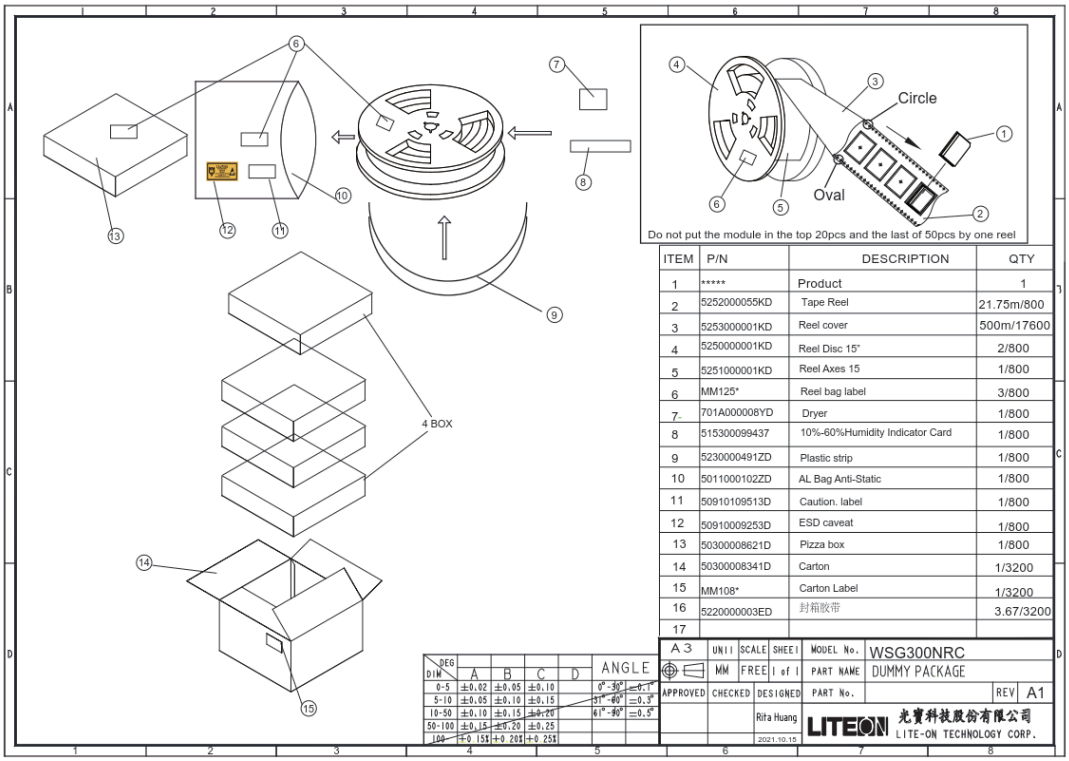

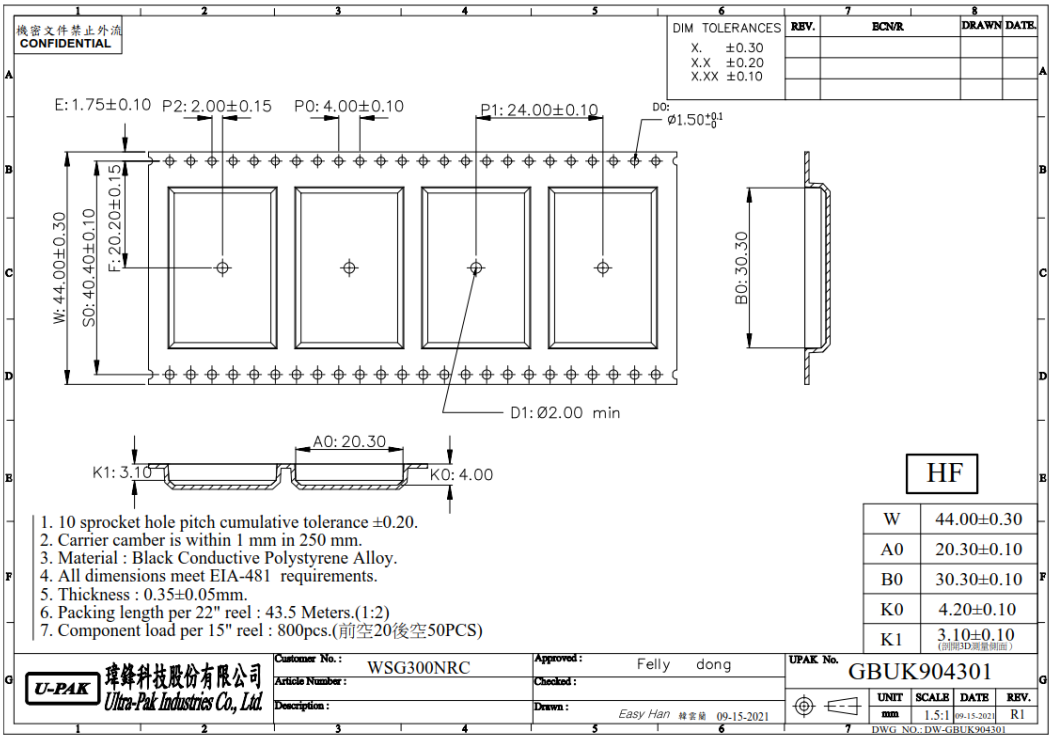

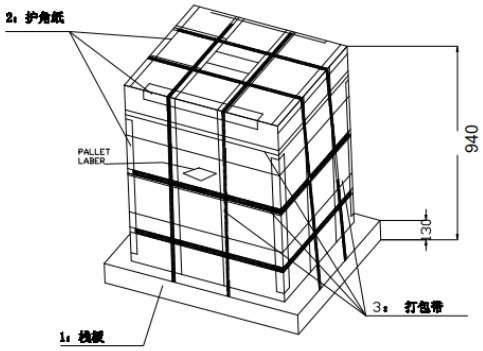

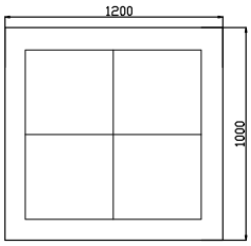

TOP VIEW 1:1

Note:
1.3LAYERS/HIGH= 940MM
2.CARTON OUT DIMENSIONS: 430*410*270MM
3. 3200 SETS /CARTON
4.4 CARTON/LAYER
5. 38400 SETS/PALLET
6.SHIP BY AIR

不得含有
WI-CQES-002
禁求鉛用之有毒,有害物質

	PART NAME	PART NUMBER	DIM	QTY
1	PALLET	5140000035WD 替代 5140000061WD	1200*1000*130MM 1000*600*130MM	1/ 38004 尾數
2	PAPER	50400000063D	850*50*50*5MM	8/ 38400
3	STRAPS	XX	XX	XX/ 38400

DEG / DIM	A	B	C	D
0-5	±0.02	±0.05	±0.10	
5-10	±0.05	±0.10	±0.15	
10-50	±0.10	±0.15	±0.20	
50-100	±0.15	±0.20	±0.25	
100-	+0 15T	+0 20T	+0 25T	

ANGLE	
0°-30°	±0.1°
31°-60°	±0.3°
61°-90°	±0.5°

UNIT	SCALE	SHEET	MODEL No.	WSG300NRC
MM			PART NAME	PACKAGE
APPROVED	CHECKED	DESIGNED	PART No.	REV A0
	Bing Li	Rita Huang 2021.10.15	LITEON LITE-ON TECHNOLOGY CORP.	

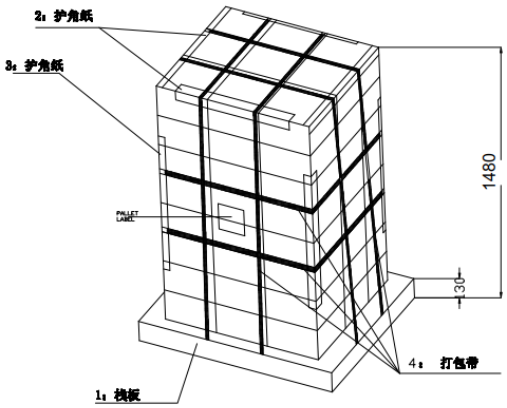

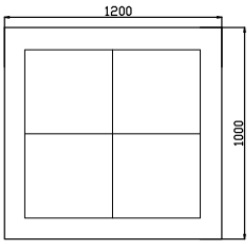

TOP VIEW 1:1

Note:
1.5LAYERS/HIGH= 1480MM
2.CARTON OUT DIMENSIONS: 430*410*270MM
3. 3200 SETS /CARTON
4.4 CARTON/LAYER
5. 64000 SETS/PALLET
6.SHIP BY SEA

不得含有
WI-CQES-002
禁求鉛用之有毒,有害物質

	PART NAME	PART NUMBER	DIM	QTY
1	PALLET	5140000035WD 替代 5140000061WD	1200*1000*130MM 1000*600*130MM	1/ 64000 尾數
2	PAPER	50400000063D	850*50*50*5MM	4/ 64000
3	PAPER	50400000740D	1500*50*50*5MM	4/ 64000
4	STRAPS	XX	XX	XX/ 64000

DEG / DIM	A	B	C	D
0-5	±0.02	±0.05	±0.10	
5-10	±0.05	±0.10	±0.15	
10-50	±0.10	±0.15	±0.20	
50-100	±0.15	±0.20	±0.25	
100-	+0 15T	+0 20T	+0 25T	

ANGLE	
0°-30°	±0.1°
31°-60°	±0.3°
61°-90°	±0.5°

UNIT	SCALE	SHEET	MODEL No.	WSG300NRC
MM			PART NAME	PACKAGE
APPROVED	CHECKED	DESIGNED	PART No.	REV A0
	Bing Li	Rita Huang 2021.10.15	LITEON LITE-ON TECHNOLOGY CORP.	